EDSTLZ970/X

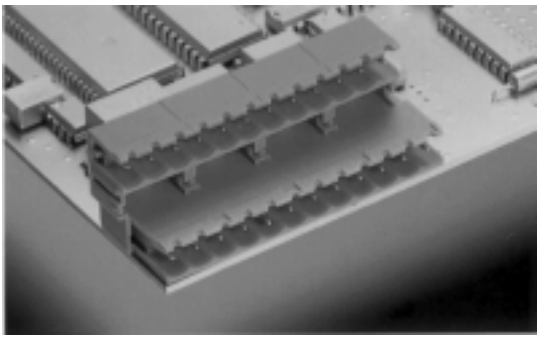

2-12 poles, Spacing 5.08 mm
insert required no. of poles **x**
How to order see page 5
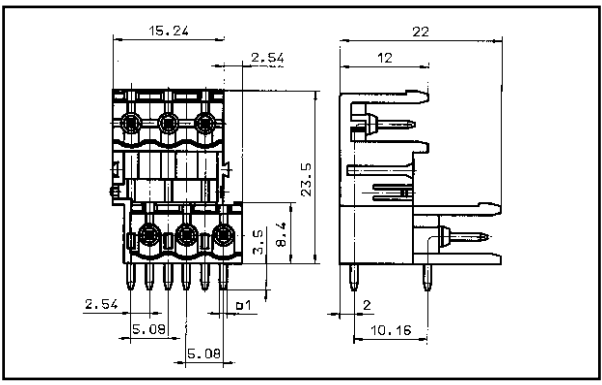
Ratings:		
Rated Voltage	**300 V**	**250 V**
Rated Current	**15 A**	**12 A (T60)**
Rating Impulse Voltage/Dirt Level		**4 kV/3**
Dimensions		
Spacing		**5.08 mm**
PCB Hole Diameter		**1.4 mm**
Materials		
Insulating Material		**PA/PBTP**
Flammability Class		**UL94 V-0**
Temperature Range		**-30°C/+105°C**
Contact Pin		**Cu**
Color		
Green